NORD
Ferrotec Nord Corp.

Thermoelectric module
2TM-127-63-6.5

FerroTec

TECHNICAL DATA

U_{max}	16 V	T_{hot}=25°C Dry air
Q_{max}	32 W	
ΔT_{max}	84°	
I_{max}	6.5 A	
ACR at 25°C	2.1 Ohm	
Pads type for both cascades: Hot side	Ceramics Al_2O_3, white 96%	
Pads type for both cascades: Cold side		
Max. processing temperature	Depends on chosen solder type	
Standard tolerances for thermal and electrical parameters ±10%		

MODULE DRAWING
standard design

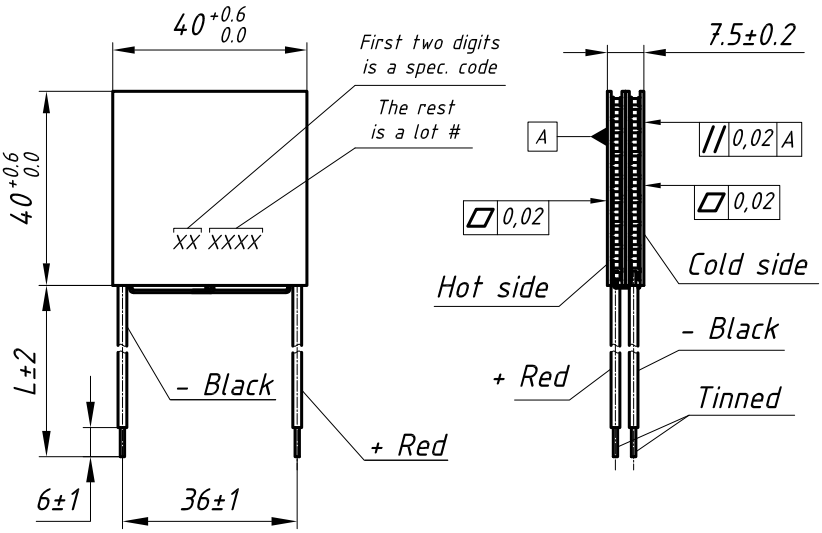

STANDARD ORDERING OPTIONS

№	Option	Parameter	
1	Lead wires	AWG №	
		20	
2	Lead wires length	L - under customer request	
3	Lead wires insulation	Type / Max. processing temp.	
		Without insulation / See solder type m.p.t	
		PVC / 105° C	
		Silicone / 180° C	
4	Internal solder	Type / m.p.	
		Type-3 / 227° C	
5	Anticorrosional coating	yes	no
6	Sealing	Type / Max. processing temp.	
		Without sealing / 200° C	
		Epoxy / 130° C	
		Silicone / 180° C	

AVAILABLE MODIFICATIONS

Design	Description
2TM-127-63-6.5 M	High reliable version on both cascades

OPTIONS UPON REQUEST

Height tolerance	± 0.02
Unflatness and nonparallelism	± 0.02

- Solder type complied to RoHS (2002/95/EC)
- For another options consult of our tecnical support engineers

Ferrotec Nord Corp.
www.ferrotec-nord.com
e-mail: info@ferrotec-nord.com
phone: +7 (499) 357-67-71
Peschany Carier 3, 109383 Moscow, Russia